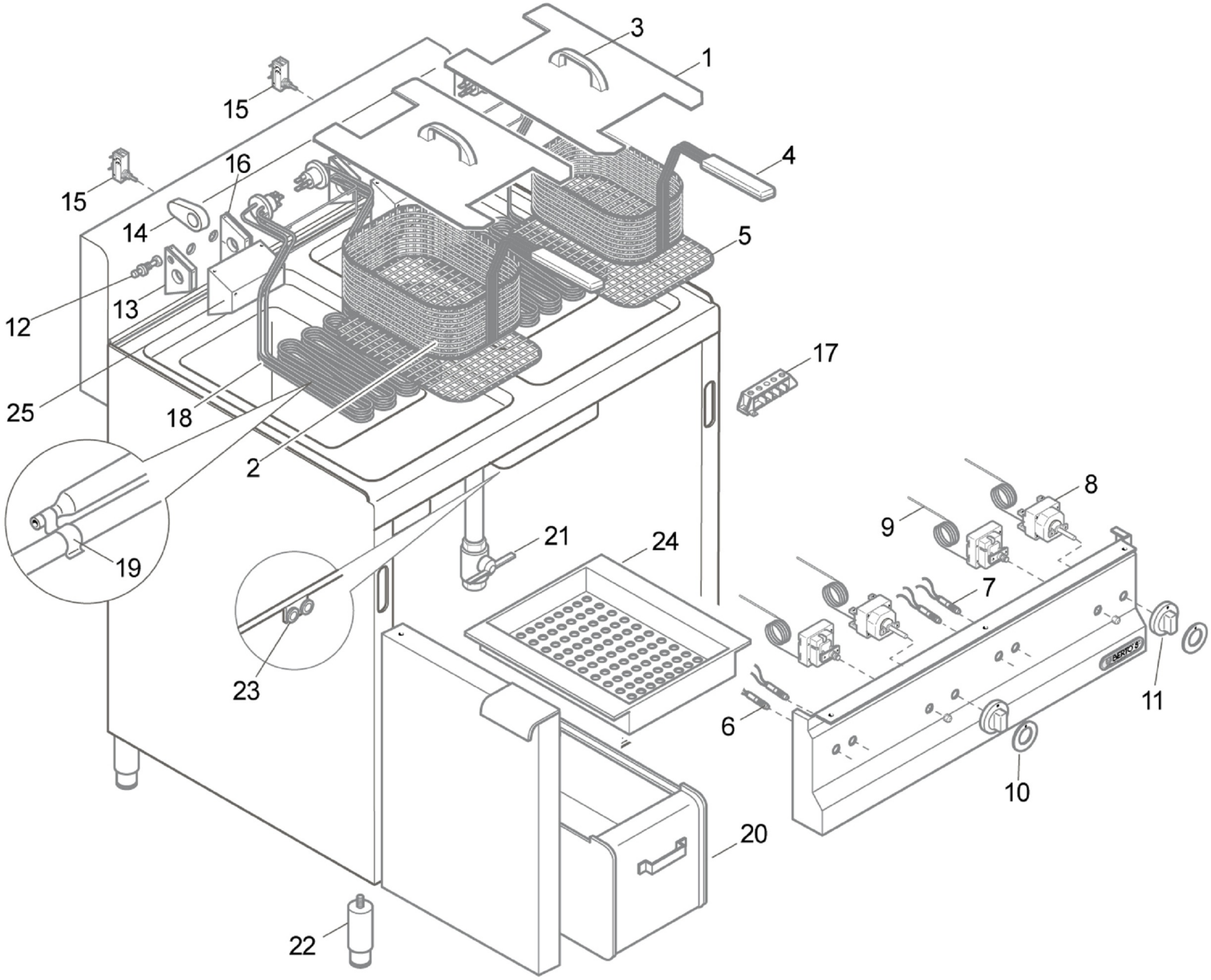
3
1
15
4
16
15
14
5
12
13
17
25
18
2
8
9
21
24
19
7
23
11
6
10
20
22

BERTO'S®
the best catering equipment

Model: E7F10-8M

Position of item	Code	Nr. of pieces	Description
1	31805200	2	BASKET LID E7F10-4/8 S.700
2	33614600	2	BASKET FOR FRYER 275X210Xh110mm - Models from 1/2003 - untill 12/2006
2	31616000	2	BASKET FOR FRYER 255X210Xh110mm - Models from 3/2007 - untill 2/2013
2	33614400	2	BASKET FOR FRYER 200X235Xh100mm - Models from 12/2006 - untill 3/2007
3	27604410	2	SATIN STEEL HANDLE 180 mm - Models from 10/2012 - untill
3	33606100	1	BASKET LID HANDLE CENTRE DISTANCE 90 mm - Models from 4/2011 - untill 10/2012
4	33502000	1	BASKET 1/2 FOR FRYER 255x95xh110 mm
5	32714400	1	TANK PROTECTION NET 215 x 275 mm
6	33171000	1	YELLOW/GREEN LIGHT 400V Ø10 mm
7	33171100	1	YELLOW/ORANGE LIGHT 400V Ø10 mm
8	32065900	2	THREE-PHASE WORKING THERMOSTAT (192° C)
9	32070800	2	THREE-PHASE SAFETY THERMOSTAT (240° C)
10	31953900	1	KNOB SILKSCREEN (0 - 195°)
11	38877600	1	KNOB PA66 PIN 6x4.6 180° SPACER - Models from 1/2010
11	31876200	1	RED KNOB FOR PIN 6X4.6 - Models from 1/1990 - untill 1/2010
12	31779700	2	ELEMENT RELEASE BUTTON - Models from 10/2006 - untill 2/2013
13	31979800	1	LH HEAD
14	31825000	1	SMALL END BUSH FOR MICROSWITCH E7F10
15	33059400	2	BIPOLAR MICROSWITCH M10X0.75
16	31979700	1	RH HEAD
17	30184200	2	6-POLE TERMINAL BLOCK
18	22016300	-	ELEMENT 9 kW 230V FOR E6/7 F10/30-K- - Models from 1/2003 - untill 2/2013
18	22016200	2	ELEMENT 6kW 230V FOR E6/7F10/30-K- - Models from 1/2003 - untill 2/2013
19	33612900	3	BULB FIXING SPRING
20	32773500	1	OIL DRIP TRAY 300 mm x 530 mm
21	32686300	1	BUTTERFLY DISCHARGE VALVE 3/4
22	24684200	4	FOOT 1 ½" h125/h175 WITH PIN
23	32583800	1	DOOR MAGNETIC CLOSING
24	32835300	1	7FBR BOWL FILTER
25	31804200	2	BOX COVER FOR FIXING HEATER